EXPERIMENT 2

Arya Basak

23MS233

AIM: Study of characteristics of an n-p-n bipolar junction transistor (BJT).

ELECTRONIC COMPONENTS REQUIRED:

1. Power supply, 2 Nos: 0 ~ 15 V
2. R_B, R_C = 1.0 KΩ, 2 Nos
3. R_B = 220 Ω, 1 Nos
4. 1.0 kΩ Potentiometer, 1.0 W
5. NPN Transistor = 1 No, CL 100 / SL 100 [CK 100 / SK 100 = PNP (equivalent) transistors
6. Breadboard = 1 No
7. Two DT-830D multi-meters for current measurements. One 8007 multimeter with probe for Voltage measurements.
8. Single stand wires = 6 Nos

THEORY:

A transistor is an electronic device widely used in electronic circuits such as amplifiers, oscillators, and logic gates. In this experiment, we study a **Bipolar Junction Transistor (BJT)**, specifically the **NPN** type.

A BJT may be visualized as a sandwich structure in which a thin p-type semiconductor region is placed between two n-type semiconductor regions. The two outer regions are called the emitter and the collector, while the central region is known as the base.

In an NPN transistor, the emitter is heavily doped and relatively small in size so that it can inject a large number of charge carriers. The collector is larger in size and comparatively lightly doped, enabling it to collect the charge carriers efficiently. The base region is very thin and lightly doped. As a result, two pn junctions are formed within the transistor: the base–emitter junction and the collector–base junction.

For transistor operation in the active region (amplifier mode), the base–emitter junction is forward biased and the collector–base junction is reverse biased. The forward bias at the base–emitter junction causes a large number of electrons to flow from the emitter into the base. Although some

holes move from the base to the emitter, this current is small because the base is lightly doped. Since the base region is very thin, most of the electrons entering the base do not recombine and are instead swept into the collector by the reverse-biased collector–base junction. Only a small fraction of electrons recombine in the base, giving rise to a small base current (I_B).

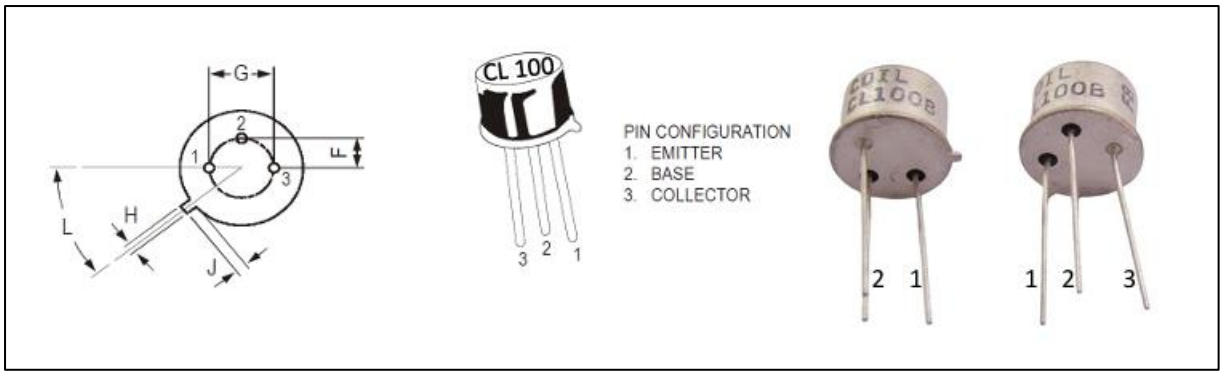

Figure 1: NPN Transistor

Thus, the collector current (I_C) is nearly equal to the emitter current (I_E), differing only by the small base current. A parameter α is defined as:

$$I_c = \alpha I_E$$

where α is a quantity very close to, but slightly less than, unity. Since

$$I_E = I_C + I_B$$

it follows that

$$I_C = \beta I_B$$

Where,

$$\beta = \frac{\alpha}{(1 - \alpha)}$$

The current gain β typically lies in the range of 100 to 200 for a practical transistor.

Characteristics of Common Emitter Connection:

Since two terminals each are needed for a transistor's input and output, while it has three – one terminal must be common between the input and the output. This leads to the classification of transistor circuits as common emitter (CE), common base (CB) or common collector (CC).

We will study the **common emitter configuration** where the input is applied between the base and the emitter and the output is taken between the collector and the emitter. The important characteristics of CE arrangement are the input and output characteristics. In the CE configuration the **input current and voltage are I_B and V_{BE}**, while the **output current and voltage are I_C and V_{CE}.**

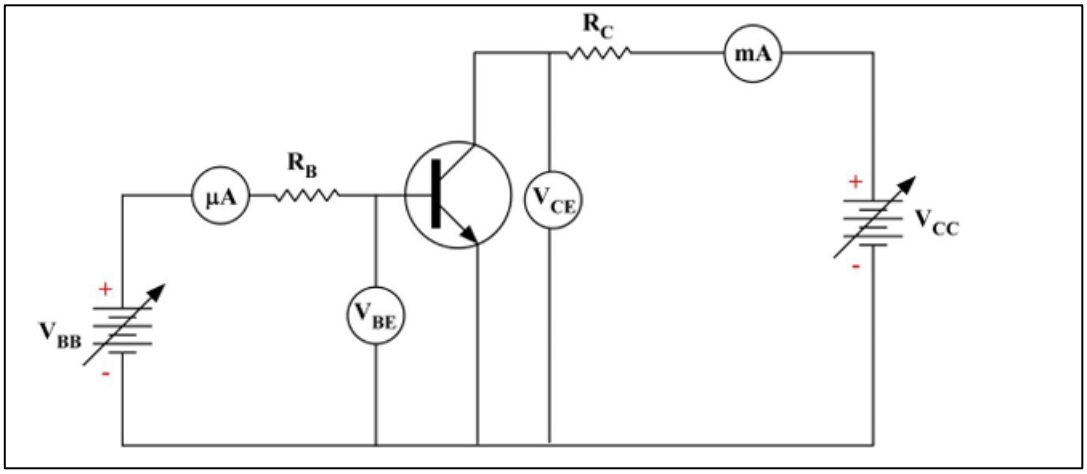

Figure 2: Circuit Diagram of CE configuration

1. **INPUT CHARACTERISTICS:**

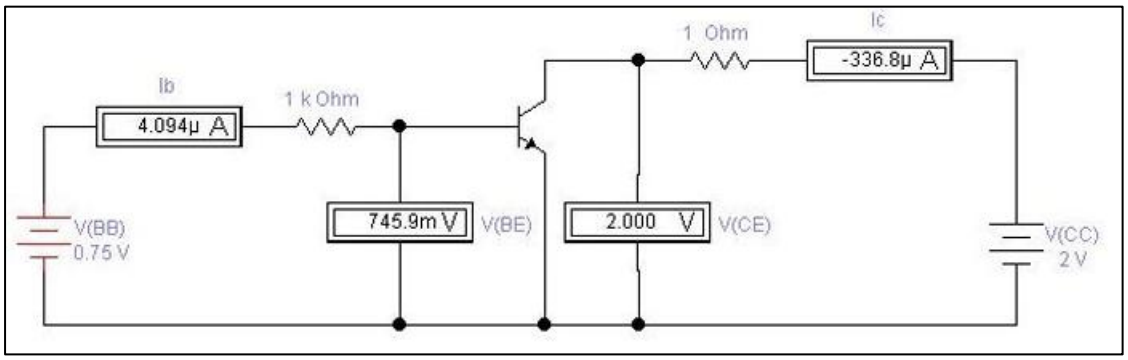

Figure 3: Circuit diagram for input characteristics of CE configuration

It is the curve between base current I_B and base-emitter voltage V_{BE} at constant collector-emitter voltage V_{CE}. The voltage V_{BE} is varied by varying V_{BB}. The battery voltage V_{CC} has to be adjusted to keep V_{CE} fixed at 2V. The input characteristics is measured for **V_{CE} = 2 V, 3 V and 4 V.**

Data Table: The entire data for this experiment can be found over here: https://docs.google.com/spreadsheets/d/1XNteQj2YJr6F6Rn5QYe0XvSGZrHZc-eJTayCjnVxrOw/edit?usp=sharing

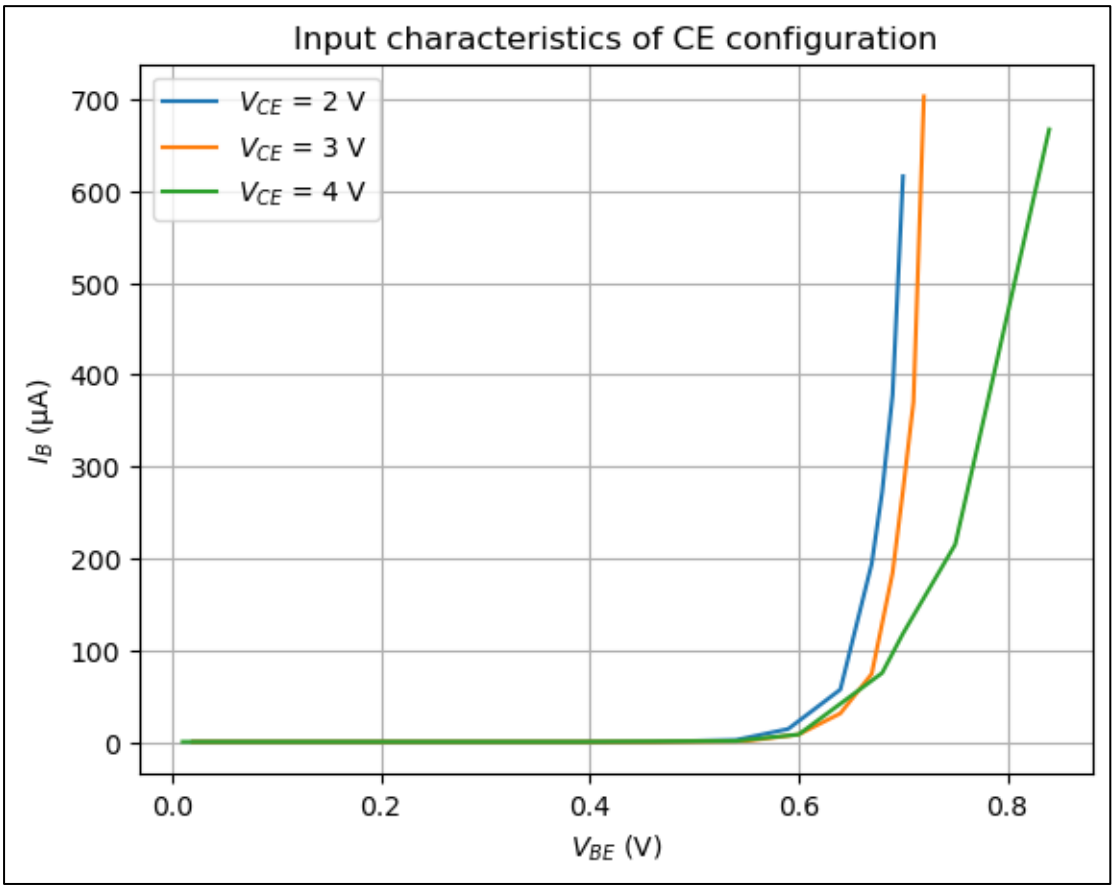

Figure 4: Input Characteristics of CE configuration

2. OUTPUT CHARACTERISTICS:

It is the curve between collector current I_C and collector-emitter voltage V_{CE} at constant base current I_B. V_{BB} has to be adjusted to fix the current I_B at 10 μA. The voltage V_{CE} is varied by varying V_{CC}. The -ve sign of I_C is ignored (direction). The output characteristics is measured for **I_B = 10 μA, 20 μA, 30 μA and 40 μA.**

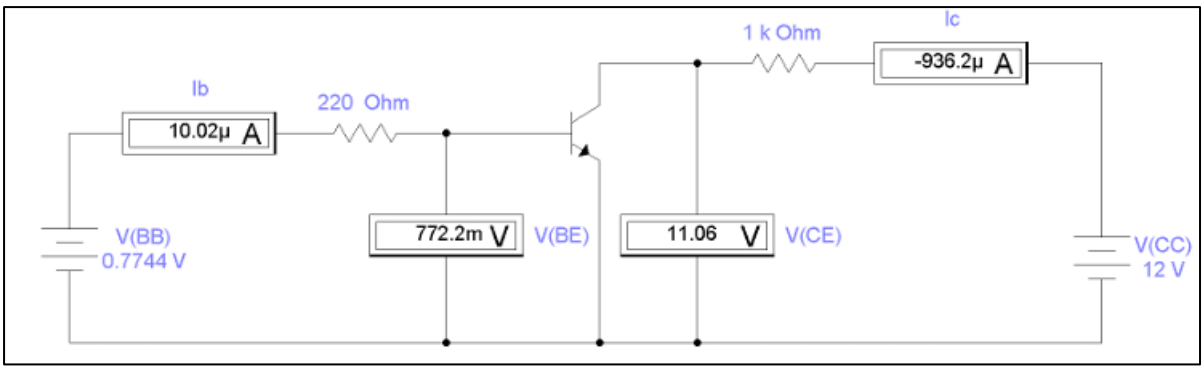

Figure 5: Circuit diagram for output characteristics of CE configuration

Data Table: The entire data for this experiment can be found over here:

https://docs.google.com/spreadsheets/d/1XNteQj2YJr6F6Rn5QYe0XvSGZrHZc-eJTayCjnVxrOw/edit?usp=sharing

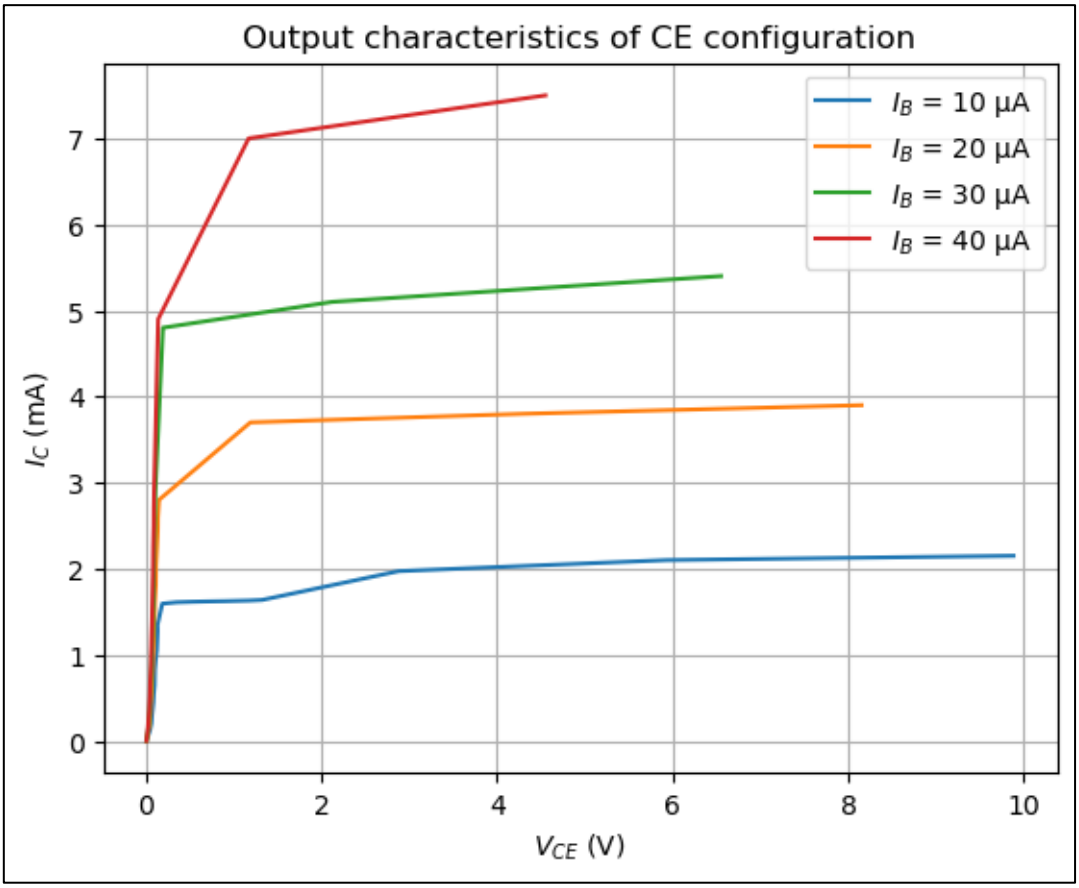

Figure 6: Output characteristics of CE configuration

β Calculation at V_{CE} = 5 V

$$\beta = \frac{I_C}{I_{\dot{B}}}$$

At V_{CE} = 5 V, the following values are obtained for I_C (through extrapolation and fitting of the previous values):

Table 1: β value at V_CE = 5V

I_C (mA)	I_B (uA)	β	Average
2.061	10	206.1	190.6063
3.813	20	190.65	
5.295	30	176.5	
7.567	40	189.175	

As can be seen, the average β value comes to be 190.61. This is within the range of 100-200.

CONCLUSION:

The input characteristics were obtained by plotting the variation of **base current (I_B in uA)** with **base-emitter voltage (V_{BE} in V)** for different fixed values of **collector-emitter voltage (V_{CE} = 2V, 3V and 4V)**. It shows that the base-emitter junction behaves like a forward-biased diode.

The output characteristics were obtained by plotting **collector current (I_C in mA)** against collector-**emitter voltage (V_{CE} in V)** for different values of **base current (I_B = 10uA, 20uA, 30uA and 40uA)**. It shows that the collector current remains nearly constant with increasing V_{CE} in the active region.

From the output characteristics, the current gain (**β**) of the transistor was determined and found to be **190.61**, within the expected range for a practical BJT.

SOURCES OF ERROR:

1. Inaccuracies in ammeters and voltmeters, limited resolution of measuring instruments, and zero errors can lead to incorrect readings of current and voltage.
2. Loose connections, contact resistance, or additional resistance in connecting wires may cause voltage drops, affecting the applied biasing conditions.
3. Difficulty in maintaining constant V_{CE} while varying V_{BE}, or constant I_B while recording output characteristics, can affect the accuracy of the curves.
4. Variations in the DC supply voltage can alter the biasing of the transistor, leading to deviations in observed characteristics.